SPECIFICATIONS					
MODEL	A	B	C	D	WEIGHT
CJL–10	9'–7 1/2"	6'–1 1/2"	4'–3"	5'–9 1/2"	27–LBS
CJL–12	11'–11 1/2"	7'–3 1/2"	4'–10 3/4"	6'–11 3/4"	29–LBS
CJL–14	14'–3 1/2"	8'–5 1/2"	5'–4"	8'–1 1/2"	33–LBS
CJL–16	16'–7 1/2"	9'–7 1/2"	6'–5"	9'–1"	38–LBS

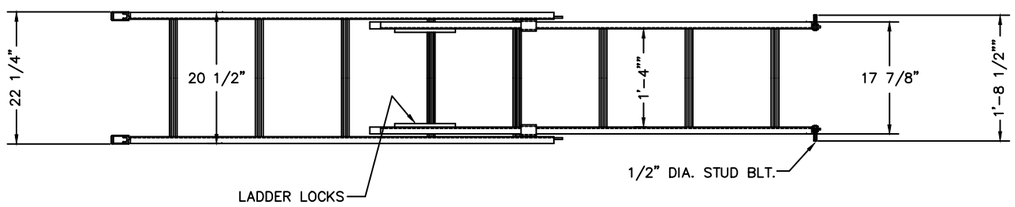

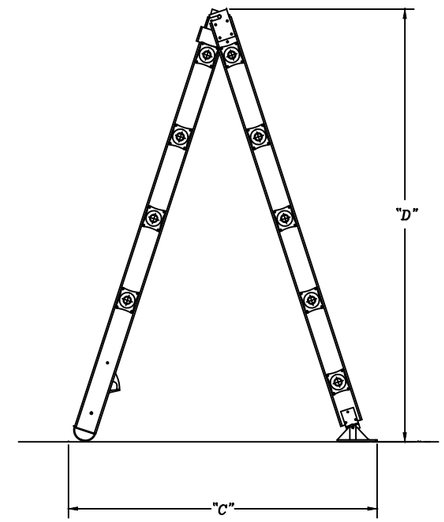

"A" POSITION

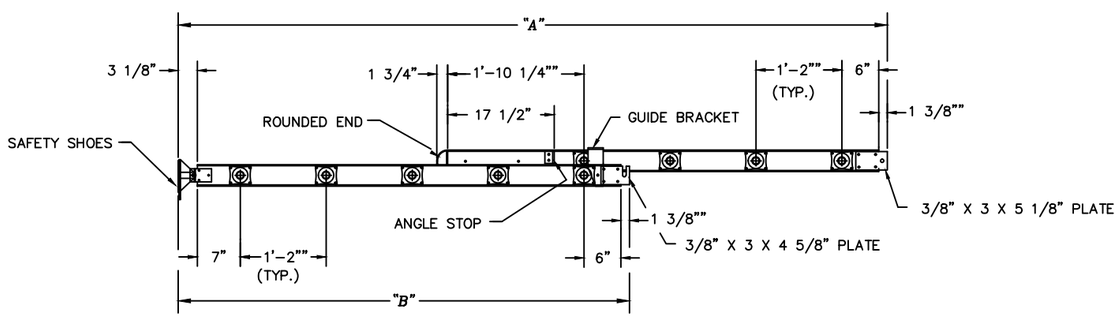

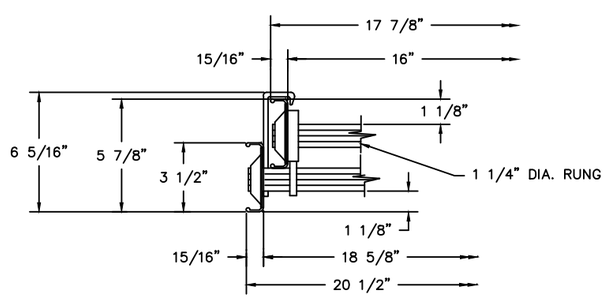

LADDER CROSS SECTION

© SAMCARBISSOLUTIONS GROUP, LLC, 2016
WITH ALL RIGHTS RESERVED

REV	DWN	DATE	CHK	DATE	REVISION

Sam CARBIS Solutions Group, LLC
Keeping People SAFER and Products FLOWING
P.O. Box 6408 Florence SC 29502-6408
843-669-6668 800-845-2387 FAX: 843-662-1536
WWW.CARBISSOLUTIONS.COM

PROPRIETARY DESIGN
THIS DRAWING IS THE PROPERTY OF AND CONTAINS CONFIDENTIAL AND PROPRIETARY DESIGN INFORMATION BELONGING TO SAMCARBISSOLUTIONS GROUP, LLC. IT MUST BE RETURNED IMMEDIATELY UPON REQUEST AND MUST NOT BE COPIED IN WHOLE OR IN PART, NOR THE INFORMATION SHOWN THEREON DISCLOSED TO THIRD PARTIES OR OTHERWISE USED EXCEPT AS SPECIFICALLY PERMITTED BY SAMCARBISSOLUTIONS GROUP, LLC.

CUSTOMER

TITLE: CJL 2-SECTION

CUSTOMER PURCHASE ORDER NUMBER: 10' TO 16'

ORDER #

SCALE: 1/2"=1'-0"

SHEET 1 OF 1

REV. 2

DRAWN HTH DATE 09/10/91

CHECK DATE

DRAWING NUMBER S–7758–1D–R3

H:\SkipLadder\FIRE LADDERS\S–7758–1D–R3.dwg, 3/1/2015 3:52 AM